R:\Projects\2009 Projects\09009 - Parkview Elementary\04 Construction Documents\01 DrawingsA-6.0 INTERIOR ELEVATIONS.dwg, 5/2/2010 12:47:07 PM, DWG To PDF.pc3

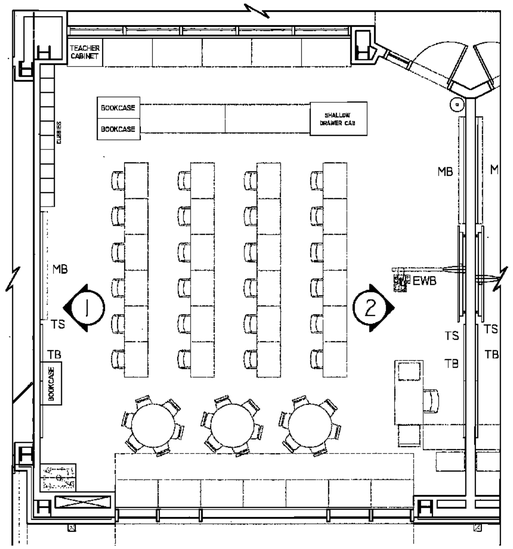


TYPICAL CLASSROOM PLAN

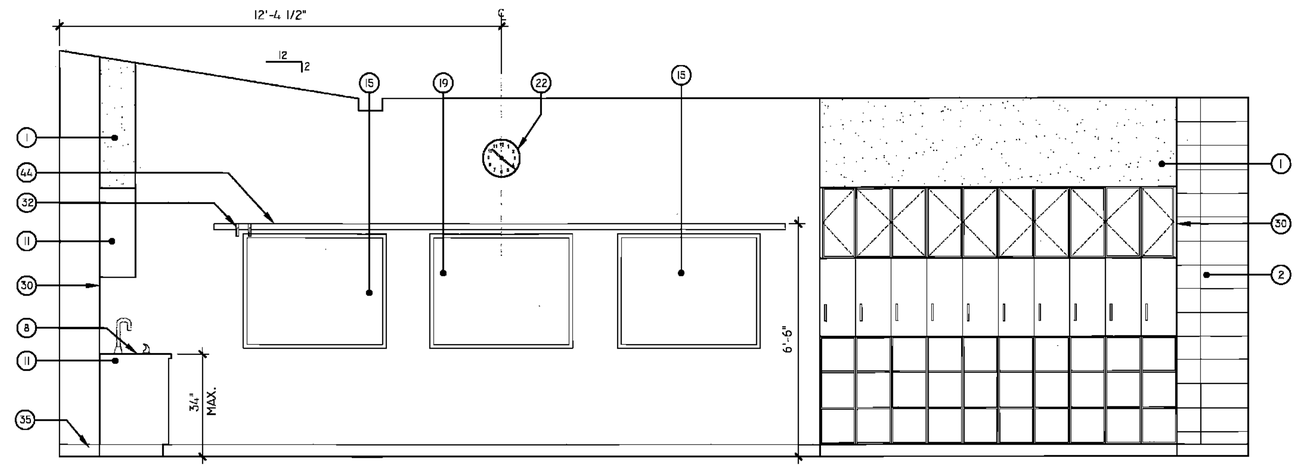


1 A6.10 TYPICAL 1st GRADE CLASSROOM ELEVATION - LOOKING TOWARDS BACK OF CLASSROOM

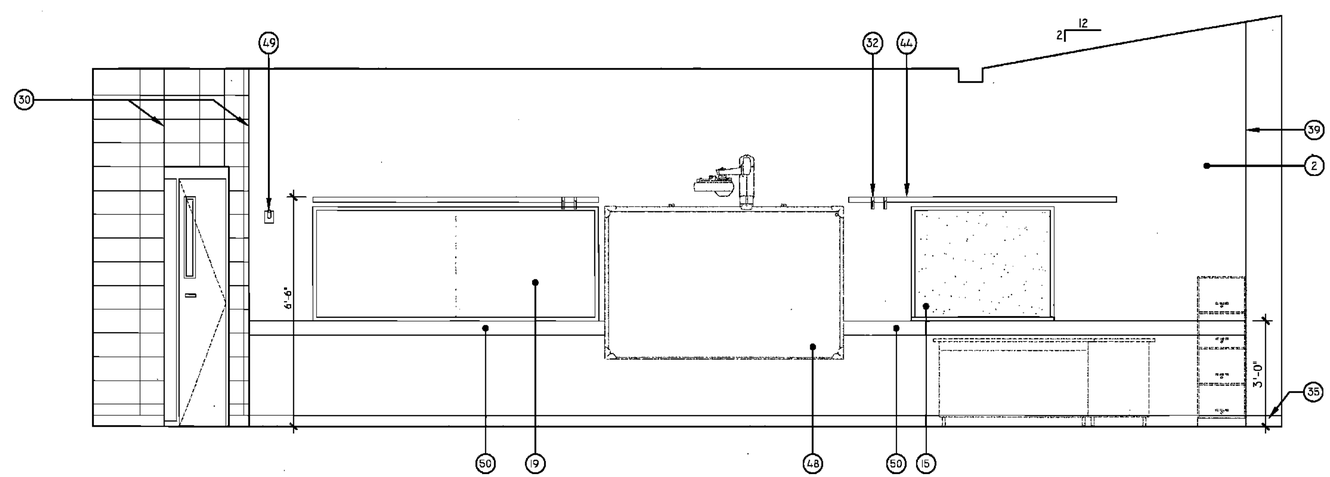


2 A6.10 TYPICAL 1st GRADE CLASSROOM ELEVATION - LOOKING TOWARDS FRONT OF CLASSROOM

RSD LOUISIANA

## LEGEND

1. GYPSUM FURDOWN (RE: FIN. SCH.)
2. CMU (RE: FIN. SCH.)
3. ACOUSTICAL WALL PANELS (RE: FIN. SCH.)
5. WINDOW SYSTEM (RE: WIN. SCH.)
6. LIGHT FIXTURE (RE: ELEC)
8. LAMINATE SURFACE COUNTER TOP
9. ETCHED GLASS SIGNAGE (RE: SPECS)
10. BACKSPLASH TO MATCH COUNTER
11. WOOD CABINETS W/ LAMINATE FINISH
12. WOOD CABINETS W/ GLASS INSERT
13. PAINTED CABINETS/ SHELVES
14. MIRROR
15. TACK BOARD
16. BLACK EPOXY RESIN COUNTER TOP
17. LIGHT SHELF
18. VENTHOOD
19. MARKER BOARD
20. SOAP DISPENSER (NIC)
21. HAND DRYER
22. WALL CLOCK
23. WALL PADS (RE: FIN. SCH.)
24. SCORE BOARD
25. PIN MOUNTED SIGNAGE
26. FIRE STATION
27. TOWEL DISPENSER
28. CUBBIES
29. EDGE OF WALL
30. MAP HOOKS
31. SHOWER SEAT
32. WATER FOUNTAIN
33. FLR BASE (RE: FIN SCH)
34. SOAP DISH (NIC)
37. METAL STORAGE RACK
38. SHOWER CURTAIN ROD
39. EDGE OF PILASTER
40. PARTITION MNTD DISP. (NIC)
41. WALL MOUNTED SINK
42. UNDERMOUNT SINK
43. UTILITY SINK
44. TACK STRIP
45. PRECAST CONCRETE (RE: STR DWGS)
46. PIN-MOUNTED SIGNAGE
47. SAFETY SHOWER, RE: SPECS
48. ELECTRONIC WHITE BOARD
49. FLAG HOLDER
50. SURFACE RACEWAY
51. ROOM PLAQUE
52. DECORATIVE HANDRAIL SYSTEM (RE: SPECS)
53. MOTORIZED WINDOW SHADE
54. STAGE CURTAINS (RE: FIN SCH & FLR PLN)
55. MOTORIZED BLEACHERS W/ INTEGRAL HANDRAIL SYSTM
56. CEILING MNTD RETRACTABLE PROJECTION SCREEN
57. DOOR (RE: DOOR SCH)
58. NOT USED
59. BASKETBALL BACKSTOP
60. MECH DUCTWORK (RE:MECH)
61. LIGHT FIXTURE (RE: ELEC)
62. TRUSSES (RE: STRUCTURAL)
63. SCOREBOARD (RE: SPECS)
64. ELECTRIC DIVIDER CURTAIN SECURED TO STRUCTURE.
65. RECESSED WALL.
66. LIGHTWGHT CURTAIN (RE:FIN SCH & FR PLN).
67. SUSPENDED PIPE GRID SYSTEM SECURED TO STRUC.
68. POWER JUNCTION BOX SECURED TO PIPE GRID SYS.
69. MOTOR OPERATED FOLDING PARTITION WALL.
70. PARTITION STACK STORAGE
71. CIRCULATION DESK
72. LIBRARY SHELVING SYSTEM

KEY PLAN

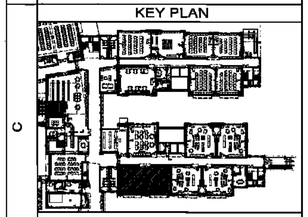

| | |
|---|---|
| BIDDING DOCUMENTS | 05/04/10 |
| NO. REVISION | DATE |
| PARKVIEW SCHOOL<br>4617 MIRABEAU AVE.<br>NEW ORLEANS, LA 70126 | PROJECT |
| 09009 | JOB NO |
| INTERIOR ELEVATIONS | TITLE |
| 1/2" = 1'-0" | SCALE |
| MMM/AB / CW | DRAWN/CHK |

A-6.10

FULLY SPRINKLERED BUILDING

RWA
ROZAS · WARD ARCHITECTS
A PROFESSIONAL CORPORATION www.rozas-ward.com
1100 POYDRAS ST. SUITE 3550 NO LA 70163 504 524 4375

ONE AND ONE HALF INCHES – ONE FOOT
THREE ONE INCH – ONE FOOT
ONE HALF INCH – ONE FOOT
ONE QUARTER INCH – ONE FOOT
ONE EIGHT INCH – ONE FOOT