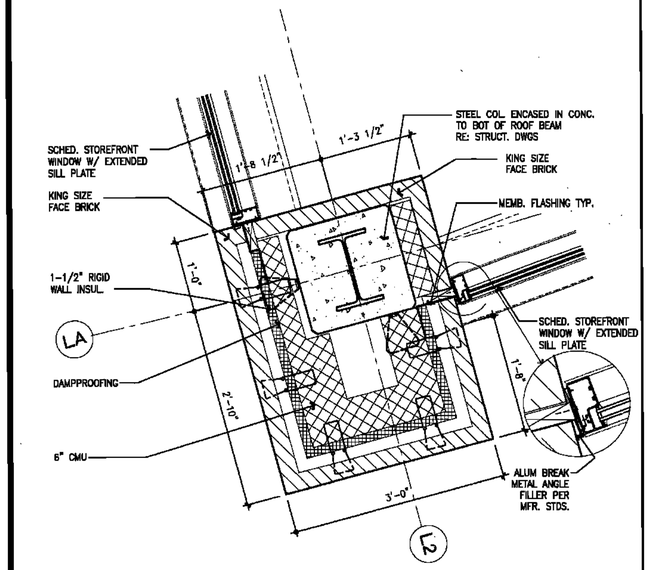

15 PLAN DETAIL 1" = 1'-0"

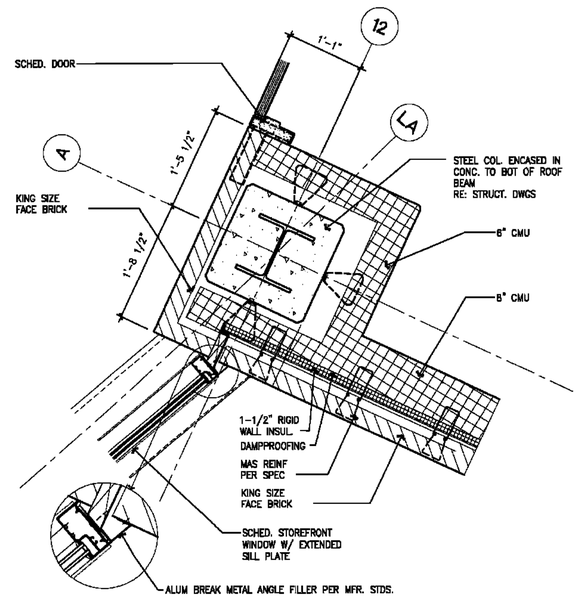

13 PLAN DETAIL 1" = 1'-0"

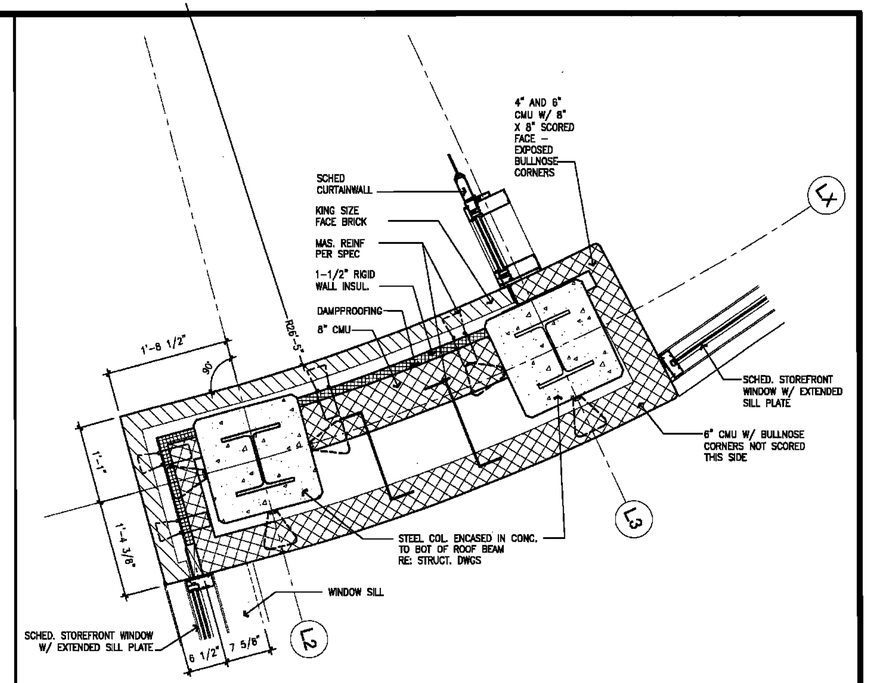

12 PLAN DETAIL 1" = 1'-0"

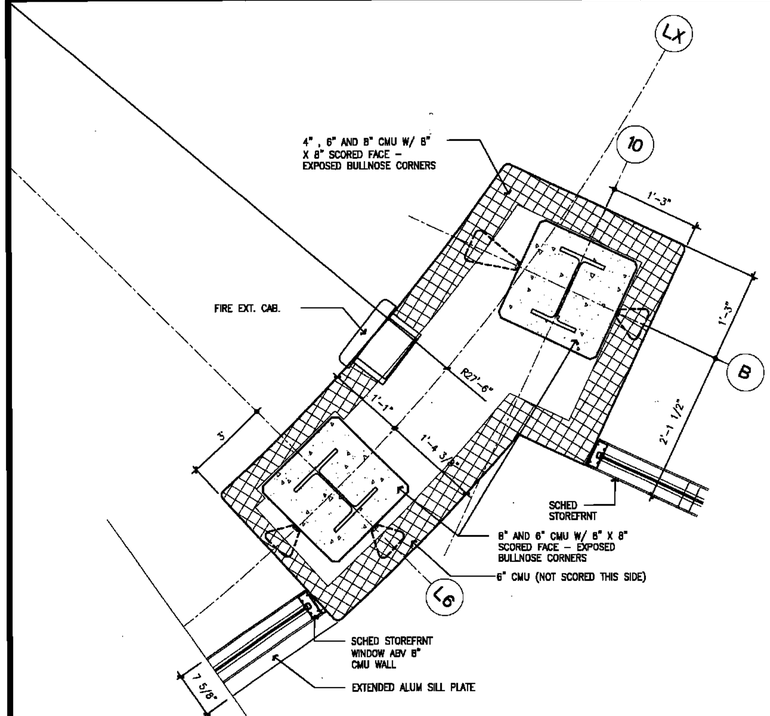

5 PLAN DETAIL 1" = 1'-0"

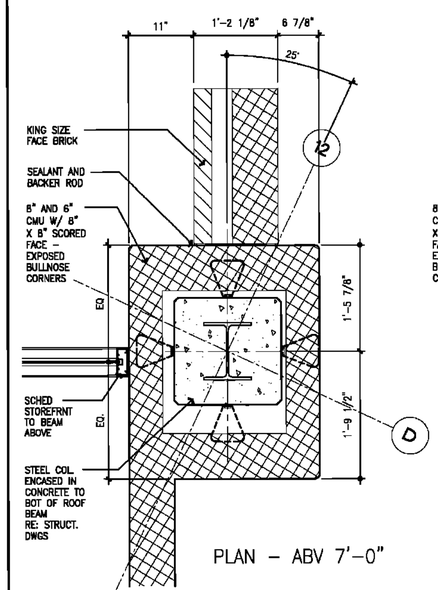

PLAN – ABV 7'-0"

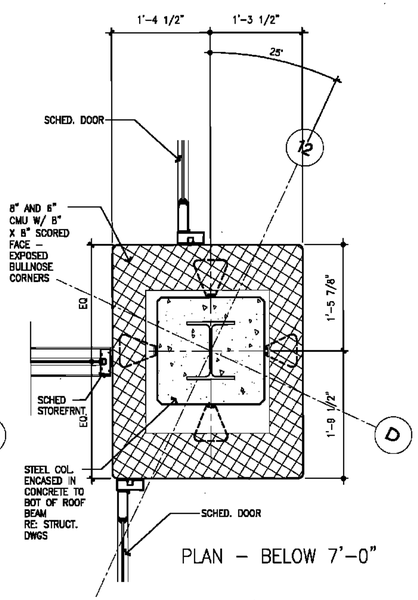

PLAN – BELOW 7'-0"

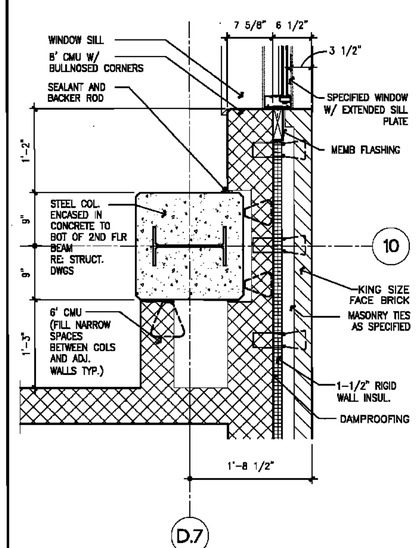

1 PLAN DETAIL 1" = 1'-0"

BYRON J. STEWART & ASSOC.
ARCHITECTS & PLANNERS, APC
2300 MARENGO STREET
NEW ORLEANS, LOUISIANA 70115
(504) 527-5339 (504) 527-5342 FAX

PBK
Architecture
Engineering
Planning
Facility Consulting

CARTER G. WOODSON SCHOOL
RECOVERY SCHOOL DISTRICT
2514 THIRD STREET
NEW ORLEANS, LOUISIANA

FOR CONSTRUCTION

JOB NUMBER: BJS 128

DATE: 04/20/10

DRAWN BY:

CHECKED BY:

REVISIONS

NO.	DATE	REVISION

SHEET TITLE: ENLARGED PLAN DETAILS

SHEET: A-2.15